FR 7180

SLIDE TYPE:	**Full-Extension Drawer Slide - Progressive-Action**
MOUNTING:	Bottom Mount

WIDTH:	**24 mm**
LOAD CAPACITY:	dynamic up to **200 kg** (full-ext.)

MATERIAL:	steel, galvanized or lightgrey powdercoated

FEATURES:	solid delrin* rollers

SPECIFICATIONS & NOTES:

- cabinet and drawer profile with screw holes
- high lateral stability through specially formed middle profile and guide rollers
- ideal running characteristic and smoothness of running
- safety clip mounted in middle profile
- double-sided captive profile
- self-closing

ⓘ compatible with regular-extension drawer slide FR 115 and FR 215

*DuPont (TM) Delrin®

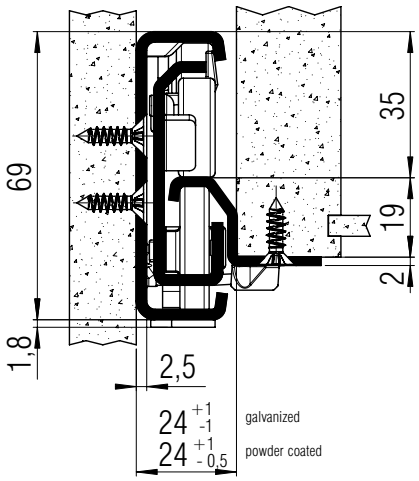

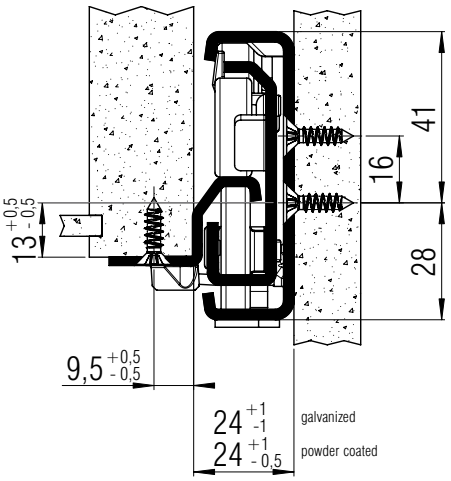

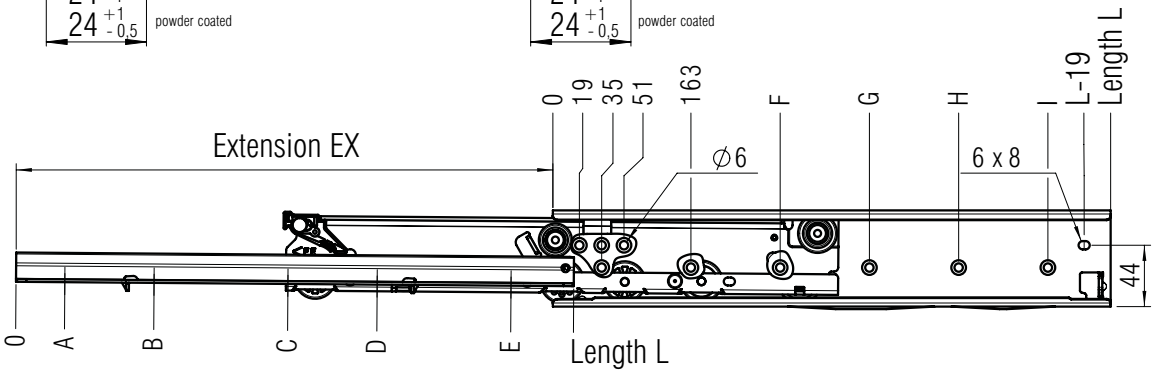

screw holes for 4,5 mm spax screws

L mm	EX full-ext.	A mm	B mm	C mm	D mm	E mm	F mm	G mm	H mm	I mm	Weight per pair (kg)	Order No. galvanized	Order No. lightgrey
400	385	46	238	366			323	355			3,64	▸ **7150**	*
450	435	32	288	416			355	419			4,11	▸ **7151**	*
500	485	50	146	370	466		291	451			4,57	▸ **7152**	*
550	535	36	196	420	516		323	483			5,04	▸ **7153**	*
600	585	22	246	438	566		355	547			5,50	▸ **7154**	*
650	635	40	296	488	616		355	611			5,97	▸ **7155**	*
700	685	26	186	346	538	666	355	515	643		6,43	▸ **7156**	*
750	735	44	204	396	588	716	355	547	675		6,90	▸ **7157**	*
800	785	30	190	446	638	766	355	611	739		7,36	▸ **7158**	*
850	835	48	240	464	688	816	355	611	771		7,83	▸ **7159**	*
900	885	34	290	578	738	866	355	611	835		8,29	▸ **7160**	*
950	935	20	340	628	788	916	355	611	771	899	8,76	▸ **7161**	*
1000	985	38	390	646	838	966	355	643	771	931	9,22	▸ **7162**	▸ **7182**
1200	1185	38	422	710	966	1158	355	675	931	1155	11,50	*	▸ **7184**

Packing Unit: **400-600 mm: 4 sets per box; 650-1000 mm: 2 sets per box; 1200 mm: 1 set per box** ▸ **prompt delivery** ***on request**

SLIDING SYSTEMS

Fulterer

Unit 9, Gledrid Industrial Park, Chirk, Wrexham, UK, LL14 5DG / Tel: +44 (0)1691 770303 / Fax: +44 (0)1691 776900 / Email: info@gsfslides.com