LGB Linear Guide

Construction: The LGB rail body is manufactured from aluminum alloy, with pressed in hardened steel shafts. The carriages consists of three rollers, held within the carriage frame.
This systems has a narrow profile, making it ideally suited for applications with space constrants.

Carriage Assembly:

Anodized aluminum alloy plate
Three of double row bearings (Rollers)
Two of concentric bolts and one of eccentric bolts
Two of plastic lubricator covers with felt wipers

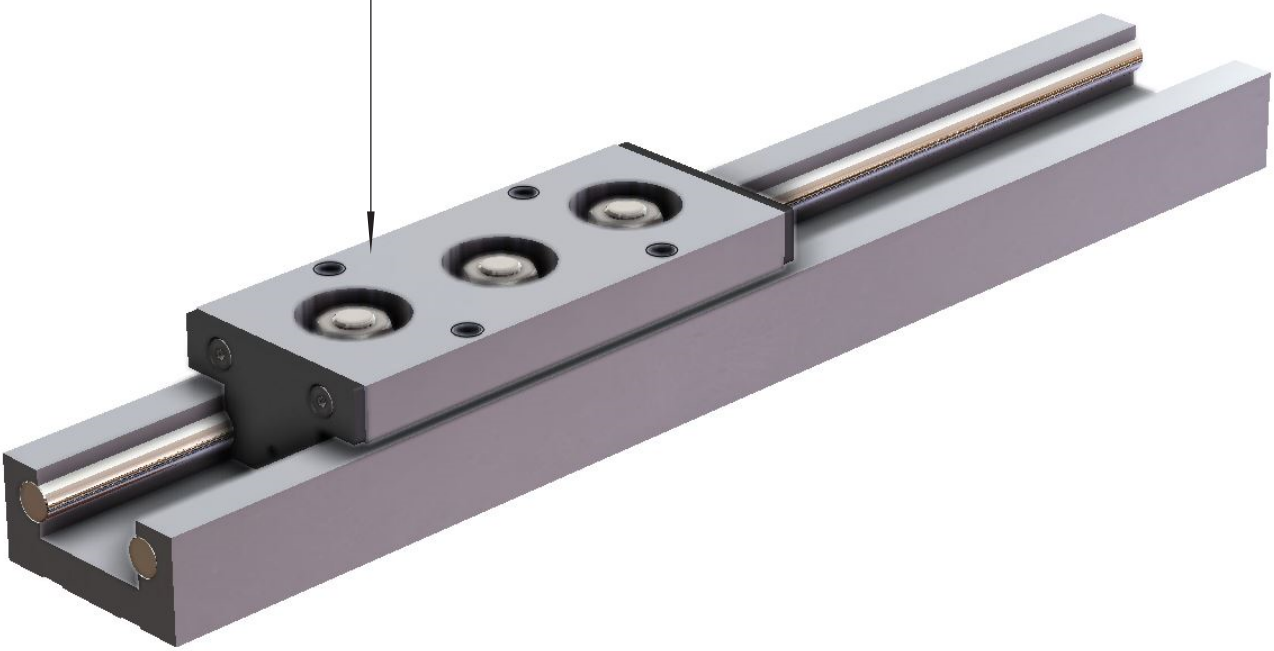

Rail:

Anodized aluminium body with two
chrome-plated steel shafts

Key Features:

High speed, Low friction and Low noise
Clearance and Preload is adjustable
Sealed and Lubricated
Narrow Body for compact appluactions

SNIBO

SLIDING SYSTEMS

Assembly:

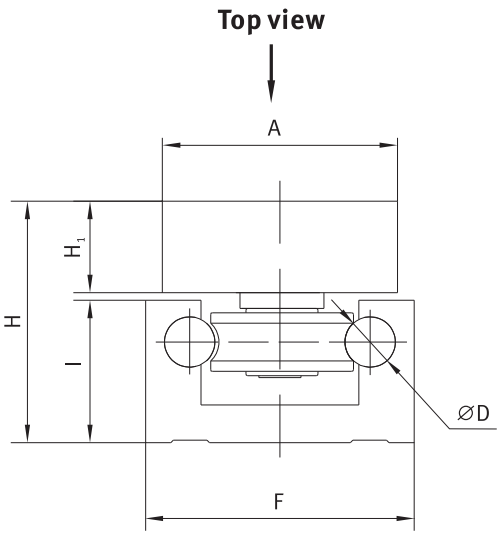

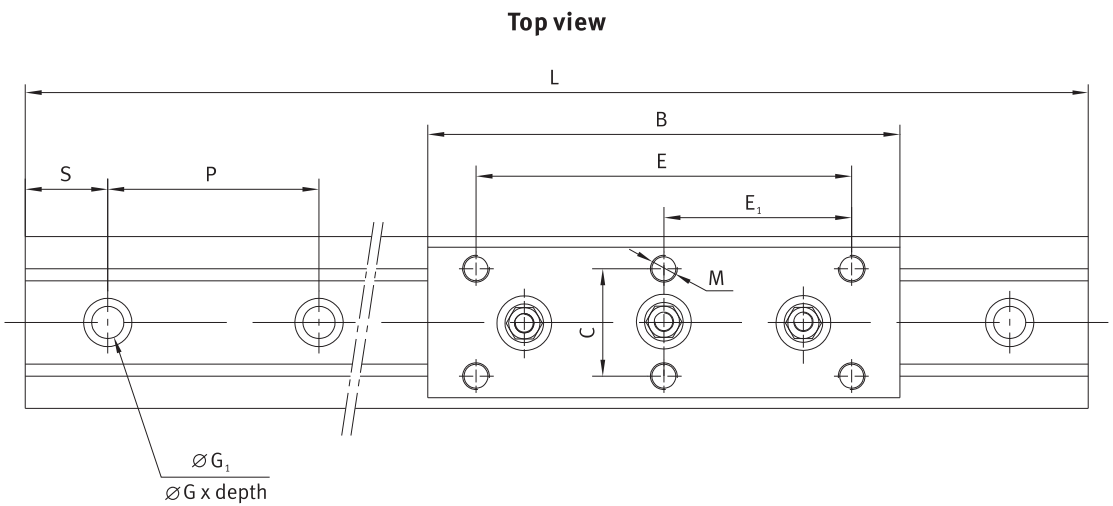

Type	Assembly Dimensions		Carriage Dimensions							Railway Dimensions						
	H	F	A	B*	C	E	E_1	H_1	M	D	Gxdepth	G_1	I	S	P	Lmax
LGB 32	28.8	32	28	88	20	70	—	10.9	4xM5	6	7.5x2.5	4.5	17	30	60	3000
LGB 47	35.5	47	47	108	38	50	—	11.5	4xM6	8	9.5x5	5.5	21.75	30	60	3000
LGB 65	43	65	64	150	47	130	65	14.7	6xM8	10	11x4	6.5	26.5	30	60	3000

* This size does not include plastic cover's thickness. All size plastic cover's thickness is 2.5mm. So covered carriages' length must add 5.0mm to size B.

Load / Life Calculation

Due to the hardness of the railway and fatigue analysis of railway and roller, the railway's life does not determine the system life. It is determined by roller's life. Load capacity of the motion guide system varies mainly by the size of bearing and railway, lubricated or not, and the load magnitude and direction. Other factors include speed and acceleration and environment etc. To calculate system life, loading factor LF should be calculated firstly. Here we provide two methods to calculate the loading factor.

Then the calculation below can be used.

Standard 4 Bearings Carriage:

Fy - Actual load in Y direction. (N)
Fz - Actual load in Z direction. (N)
Mx - Actual moment in X direction. (N·m)
My - Actual moment in Y direction. (N·m)
Mz - Actual moment in Z direction. (N·m)

Below parameters can be taken from the table of Load capacity.

Fy max - Max load capacity in Y direction. (N)
Fz max - Max load capacity in Z direction. (N)
Mx max - Max moment capacity in X direction. (N·m)
My max - Max moment capacity in Y direction. (N·m)
Mz max - Max moment capacity in Z direction. (N·m)

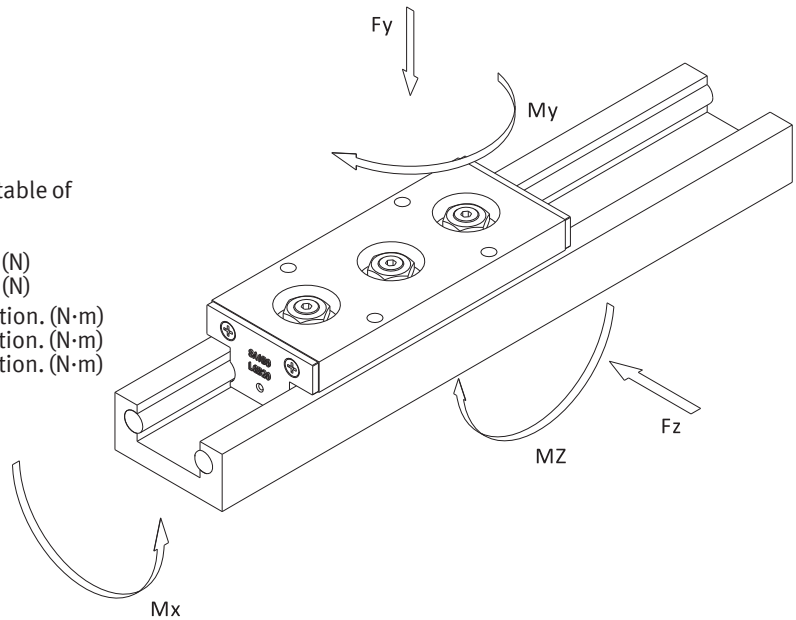

Life Capacity Calulation:

$$LF = \frac{Fy}{Fymax} + \frac{Fz}{Fzmax} + \frac{Mx}{Mxmax} + \frac{My}{Mymax} + \frac{Mz}{Mzmax}$$

LF should not exceed 1 for any combination of loads.

Maximum Load Capacity:

Railway type	Max Load capacity(N)		Max moment capacity(N.m)		
	Fymax	Fzmax	Mxmax	Mymax	Mzmax
LGB 32	330	1000	1.8	12	5.5
LGB 47	520	1200	6.6	45	15
LGB 65	1200	4000	19	120	50

Life Calculation:

After getting Loading Factor LF, the life in km can be calculated by using the formula below. The basic life for the LGB systems is 100km.

Lubricated system

$$\text{Life(km)} = \frac{\text{Basic\_life}}{(0.03+0.97LF*f)^3}$$

f - Reduction coefficient of the application and environment.

None vibration or shock, Low speed (<1m/s), Low frequency shift direction, clean environment.	1-1.5
Light vibration or shock, medium speed (1-2.5m/s) medium frequency shift direction, some dirtiness	1.5-2
Heavy vibration or shock, high speed (>2.5m/s) high frequency shift direction, heavy dirty	2-3.5

Calculation example:

A machine is using an LGB47 railway and carriage. The carriage and work-piece total weight 6 kg. When the carriage moving, there is an external load of 10N exerted as below drawing. Working environment is clean. There is no vibration or shock.

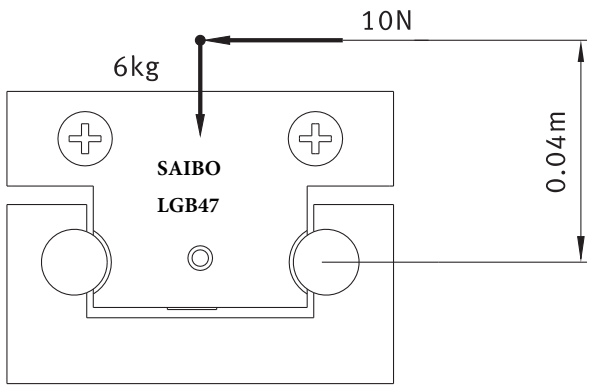

The load factor LF, is calculated using the formula below:

$$\mathbf{LF} = \frac{Fy}{Fymax} + \frac{Fz}{Fzmax} + \frac{Mx}{Mxmax} + \frac{My}{Mymax} + \frac{Mz}{Mzmax}$$

Fy = 6 kg x 9.8 (gravity) = 58.8 N

Fz = 10 N

Mx = 10 x 0.04 = 0.40 N·m

My = 0

Mz = 0

Take parameters Fy max, Fz max, Mx max, My max, Mz max from table and then fill in the formula

$$\mathbf{LF} = \frac{58.8}{520} + \frac{10}{1200} + \frac{0.40}{6.60} + \frac{0}{Mymax} + \frac{0}{Mzmax} = 0.182$$

According to the description of working condition of light shock, take f=1.1

$$\mathbf{Life(km)} = \frac{100}{(0.03+0.97LF*f)^3}$$

$$= \frac{100}{(0.03+0.97*0.182*1.1)^3}$$

$$= 8849km$$

Maintenance and Setting

Setting Free Clearance:

The LGA system does not require any clearance for rigidity or stability. The standard LGA carriage consists of 2 concentric bolts, on one side, with the 2 eccentric bolts on the other. the two eccentric bolts are used for setting free clearance. Please follow the setting procedure bellow:

1. Tighten the concentric bolts.
2. Tighten the eccentric bolts to as close to the critical point as possible, but do not over tighten. (This is done to rotate the eccentric bolts).
3. Rotate the eccentric bolts by using as straight screwdriver in the end of the stud to adjust the clearance. Make sure that the clearance is set to zero.
4. Now slide the carriage along the rail by hand, making adjustment to the eccentric bolts, until the bearings are slightly slipping with resistance.
5. Once you have the required setting, hold the eccentric bolts in place and tighten the securing nut.

Setting Pre-Load:

To set the pre-load, first follow steps 1 to 3 above, at this point you are able to set the pre-load of the bearing on the rail.
appropriate pre-load should be decided according to the application.
Over pre-loading the bearings will decrease the systems life.
Please be careful.

Lubrication:

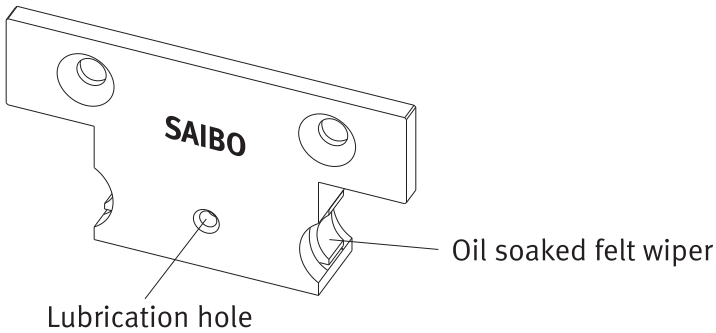

The plastic lubrication covers contain oil soaked felt wiper which can be re-lubricated via lubrication holes shown above.
These lubrication covers will require re-lubrication regularly dependent on the appliaction requirements

Accuracy:

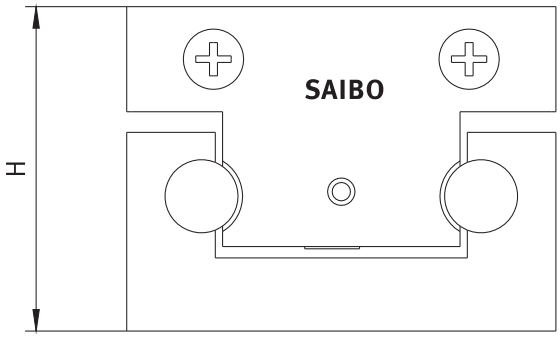

Tolerance H = +/- 0.20mm
Note: Higher accuracies can be achieved upon request

Technical Specifications

Railways:

Material and Finish: Carbon Steel Shafts, pressed into Aluminum Alloy Body

Bearings:

Material and Finish:
Carbon-chromium bearing steel, hardened and tempered.
Niltrile Rubber Seals
Plastic Cage
High Tensile Steel Studs, Chemical black finish
Temperature Range; -20degC to +80degC

Carriage Plate:

Material and Finish: High Strength Aluminum Alloy

Lubrication Covers:

Material:
Impact Resistant Thermoplastic Elastomer
Felt Wipers.
Temperature Range; -20degC to +60degC

External Lubrication:

68 cSt viscosity or similar oil should be for all Lubricators
Lubricator can be supplied 'dry' for customers to use there own lubricant.

Maximum Working Parameter:

Maximum Linear Speed	= 10 m/s
Maximum Accerlation	= 50 m/s^2

Higher speeds are possible however, speed is dependent upon stroke, duty and environmental conditions.
Please contact our offices for further assistance with specific applications.